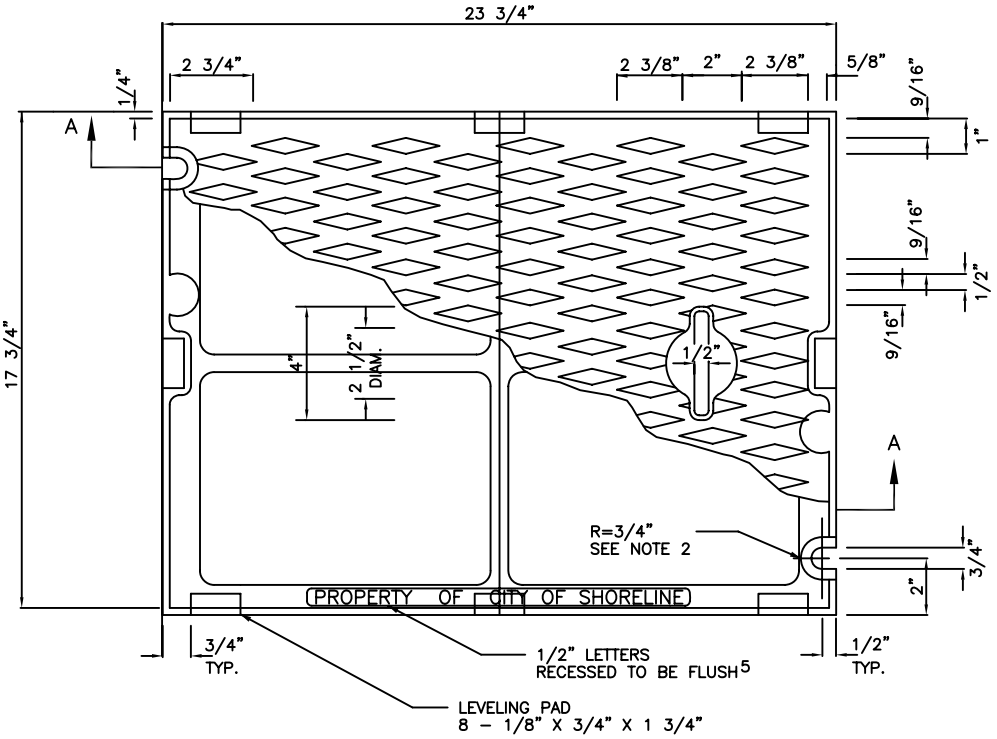

PLAN COVER

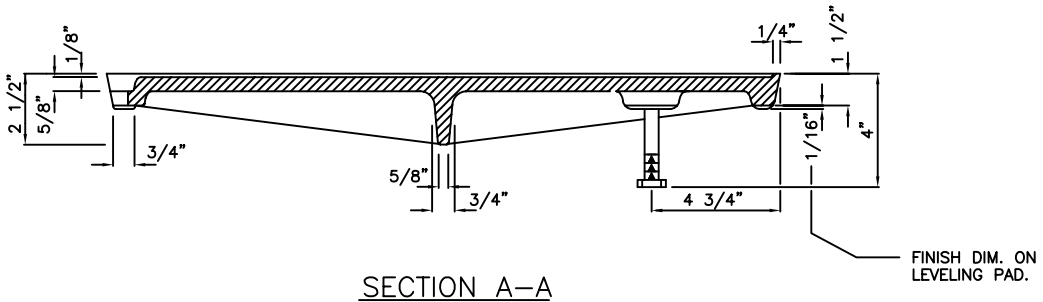

SECTION A–A

NOTES:

1. USE WITH FRAME (SEE STND DWG 730) DRILLED & TAPPED FOR LOCKING BOLTS.

2. USE WITH TWO LOCKING 5/8"–11 NC STAINLESS STEEL TYPE 304 STEEL SOCKET HEAD (ALLEN HEAD) CAP SCREWS 2" LONG.

3. MATERIAL IS CAST IRON PER ASTM A48 CLASS 30.

4. THE WORDS "PROPERTY OF CITY OF SHORELINE" SHALL BE OMITTED IF COVER IS ON A PRIVATE SYSTEM.

CITY OF SHORELINE	Public Works Planning and Development Services	RICHARD L. MERRITT STATE OF WASHINGTON 26139 REGISTERED PROFESSIONAL ENGINEER EXPIRES 12/10/2007	**Solid Cover**	**731** NOT TO SCALE Revision Date December 2006